INSTALLATION INSTRUCTIONS FOR WALL MOUNTED LOOP POWERED ADDRESSABLE SOUNDERS, SOUNDER STROBES AND STROBE ONLY MODELS

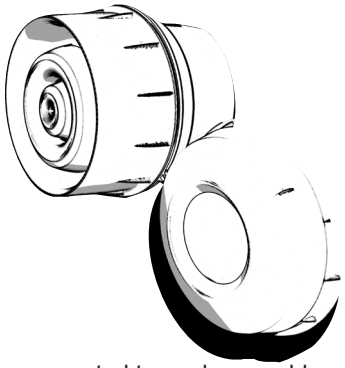

WSO-xx-N** = Sounder Non Isolation
WSO-xx-I** = Sounder Isolation

WSS-xx-N** = Sounder Strobe Non Isolation
WSS-xx-I** = Sounder Strobe Isolation

WST-xx-N** = Strobe Non Isolation
WST-xx-I** = Strobe Isolation
xx = Denotes colour
** = Denotes Customer ID Code

GENERAL

The range of intelligent AV devices are designed to be connected to analogue addressable fire alarm systems.
These devices must only be connected to control panels that use a compatible proprietary analogue addressable communication protocol.
These devices receive their power from the loop, and can be controlled via the communication protocol(s).
The sounders have three volume levels and 32 tone sets. Models (WSO-xx-I**, WSS-xx-I**, WST-xx-I**) containing the character 'I' prior to the Customer ID code include in built isolation providing short circuit protection of the loop.
Up to 159 addresses are available. (consult the panel instructions to confirm compatibility)
These are selected via the two rotary switches. The 'tens' digits go from 0 to 15 and the 'units' from 0 to 9.
Note: if the control equipment is not capable of taking more than 99 module addresses, a fault condition will be generated for every address over 99.

SPECIFICATIONS	WSO-xx-*** Sounder	WSS-xx-*** Sounder Strobe	WST-xx-I** Strobe
Signaling Line Supply Voltage (non isolation)	15 to 29VDC (24VDC typical)		
Signaling Line Supply Voltage (isolation)	15 to 29VDC (24VDC typical)		
Max current consumption (non isolation) (High Volume Tone 13 @24V)	4.95mA	8.90mA	N/A
Max current consumption (isolation) (High Volume Tone 13 @24V)	5.14mA	9.09mA	N/A
Max peak power	146.2mW	239.8mW	99.12mW
Sound Output to EN54-3 (High Volume Tone 13 @24V)	99dB(A) ± 3dB		N/A
Beacon flash rate	N/A	1Hz	1Hz
Max current consumption @ 24V (non isolation) WST-xx-***	N/A	N/A	3.94mA
Max current consumption @ 24V (isolation) WST-xx-***	N/A	N/A	4.13mA
Quiescent Current	450uA		
Operating temperature range	-25 to +70°C		
Relative humidity	up to 93% (± 3%) - non condensing		
Terminal Size	Terminal Size 2.5mm^2 - maximum		

Note: This product is classified as a category `O` device to EN54:23 standard for visual alarm devices. Only variants supplied with a clear lens will be approved to 'O' Class (WSS-PC-*** and WST-PC-***)
At an installation height of 2.4m and any given orientation, the specified light coverage shape and value is achieved. This is approximately a cone of light projected at 60° base angles from the device centre with a depth of 2.5m and a diameter of 2.2m. An exact coverage shape can be seen by downloading the following drawing from the KAC website, 132962-IAV-O-CLASS-EN54:23-WST.pdf, 173112-IAV-O-CLASS-EN54:23-WSS-DSS.pdf
Model types using a translucent red or amber lens are not EN54-23 approved. These model types must not be used as visual alarm devices to provide a primary warning notification of fire.

TERMINAL CONNECTIONS

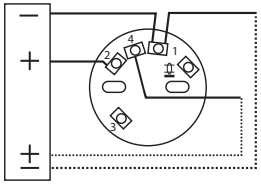

VOLUME SETTINGS
Volume setting is selected by SW6 and SW7 of the 8 way DIP switch. The appropriate tone set is selected by SW1 to SW5 of the 8 way DIP switch (see table 1) The 2nd stage tone (related to the 1st stage tone) is controlled by the fire panel via the protocol.

SW6	SW7	Volume Setting
OFF	OFF	HIGH
OFF	ON	MEDIUM
ON	OFF	LOW
ON	ON	LOW

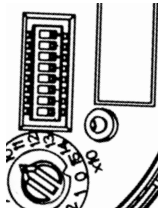

BASES/IP RATING

B501AP (IP 21C)

Deep Back box (IP 33C)

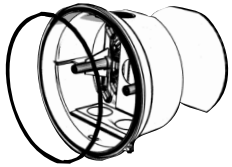

If the deep back box option is required then the wall gasket must be fitted behind the deep base, and the sealing o-ring fitted after attaching the low profile base.

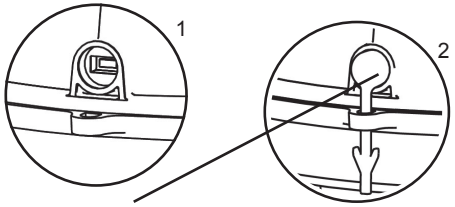

Note: Bung seal must be fitted with the deep back box.

INSTALLATION

Affix B501AP to a suitably flat wall. Terminate the cable to the appropriate terminals. For surface mount wiring the cable can enter the B501AP via the break outs provided. Select the appropriate Tone and Volume settings via the DIP switch.
Locate the main assembly on to the base by rotating until it locks into place.

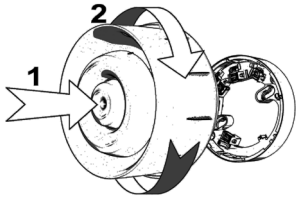

CONTINUITY SPRING

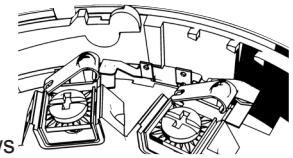

The B501AP incorporates a continuity spring between terminals 2 and 4. This allows the continuity of the field wiring to be checked without the need for the device to be present. Inserting the device will disengage the spring. Removing the device will close the loop.

ANTI TAMPER LOCK

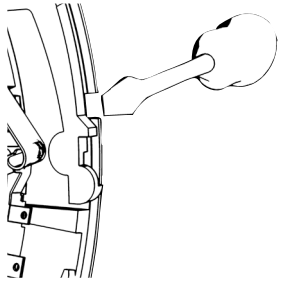

The B501AP also includes a tamper resistant feature that when activated prevents removal of the unit without the use of a special tool. This method is consistent with the anti tamper feature across all devices using this base. This prevents the device being turned to enable its release.

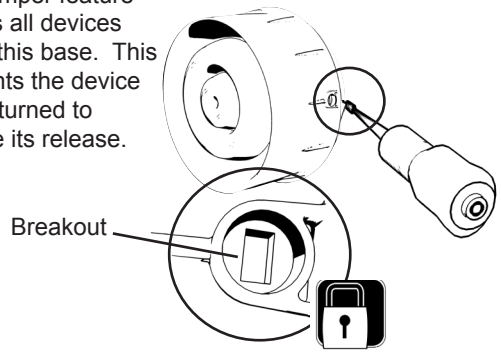

For isolator specification refer to document SP11-2848 available on request

Table 1 - VERSION 8C

DIP setting O=Off/1=On SW 1,2,3,4,5	No	Pattern	Nominal Frequency	Maximum consumption (mA) (WSO-WSS) High	(WSO-WSS) Medium	(WSO-WSS) Low	Switching Frequency	Description	Market	Standard	2nd Stage Tone
0,0,0,0,0	1	Alternating	525/440	5.13 /9.1	2.41 / 6.4	1.45 / 5.4	2Hz (100ms/400ms)	French Fire Sound AFNOR	France	NFS 32-001	7
1,0,0,0,0	2	Alternating	800/922	4.42 / 8.4	1.98 / 5.9	1.38 / 5.3	1Hz		UK	BS5839 Pt1	8
0,1,0,0,0	3	Alternating	800/922	4.38 / 8.3	1.98 / 5.9	1.37 / 5.3	2Hz	Alternating tone telecoms	UK	BS5839 Pt1, FP1063.1	8
1,1,0,0,0	4	Alternating	2400/2900	4.21 / 8.2	3.45 / 7.4	1.61 / 5.6	3Hz	Alternating High Frequency			10
0,0,1,0,0	5	Alternating	2500/3100	5.49 / 9.4	4.09 / 8.0	1.56 / 5.5	2Hz	Security Alarm			10
1,0,1,0,0	6	Alternating	988/645	5.61 / 9.6	2.21 / 6.2	1.49 / 5.4	2Hz				8
0,1,1,0,0	7	Continuous	630	5.19 / 9.1	1.81 / 5.8	1.12 / 5.1		All clear	Sweden		1
1,1,1,0,0	8	Continuous	922	5.10 / 9.0	2.08 / 6.0	1.44 / 5.4				BS 5839 Pt 1	2
0,0,0,1,0	9	Continuous	1200	4.98 / 8.9	2.10 / 6.0	1.74 / 5.7					2
1,0,0,1,0	10	Continuous	2810	4.96 / 8.9	3.00 / 6.9	1.42 / 5.4		HF Continuous			4
0,1,0,1,0	11	Sweep	150-1000	5.90 / 9.8	2.10 / 6.0	1.55 / 5.5	Rising from 150Hz to 1000Hz in 10 seconds, then 40 seconds at 1000Hz, then falling from 1000Hz to 150Hz in 10 seconds, then 20 seconds at 150Hz, then repeating. Total period 80 seconds.	"Gasalarm" Tone			22
1,1,0,1,0	12	Intermittent	420	5.86 / 9.8	2.40 / 6.3	1.42 / 5.4	0.625s on, 0.625 sec off	AS2220 alert tone	NZ, Aus	AS2220	13
0,0,1,1,0	13	Sweep	500-1200	4.95 / 8.9	2.76 / 6.7	2.31 / 6.3	0.25 sec off, 3.75 sec on	AS2220 evacuate tone	NZ, Aus	AS2220	12
1,0,1,1,0	14	Intermittent	630	4.36 / 8.3	2.00 / 5.9	1.03 / 5.0	3.33Hz 150ms on, 150ms off	Swedish alarm tone	Sweden		7
0,1,1,1,0	15	Intermittent	922	3.86 / 7.8	1.76 / 5.7	1.27 / 5.2	0.8Hz 0.25s on, 1s off	Intermittent Tone	UK	BS 5839 Pt 1	8
1,1,1,1,0	16	Intermittent	922	3.97 / 7.9	1.73 / 5.7	1.29 / 5.2	0.5Hz 1s on, 1s off	Back up alarm LF & BS5839 Pt 1	UK	BS5839 Pt 1	8
0,0,0,0,1	17	Intermittent	2810	3.65 / 7.6	2.97 / 6.9	1.43 / 5.4	1Hz	Back up alarm HF & BS5839 Pt 1 2nd tone	UK	BS5839 Pt 1	10
1,0,0,0,1	18	Intermittent	922	3.97 / 7.9	1.73 / 5.7	1.29 / 5.2	1Hz 500ms on, 500ms off	LF BS5839 Pt 1	UK	BS5839 Pt 1	8
0,1,0,0,1	19	Intermittent	950	4.38 / 8.3	1.76 / 5.7	1.32 / 5.3	0.22Hz (0.5s on, 0.5s off) rptx3, 1.5s off		Australia	ISO8201	12
1,1,0,0,1	20	Continuous	800	4.51 / 8.5	1.98 / 5.9	1.37 / 5.3				BS 5839 Pt 1	22
0,0,1,0,1	21	Sweep	400-1200	5.00 / 8.9	2.31 / 6.3	1.52 / 5.5	(0.5s on, 0.5s off)*3, 1.5s off	Temporal 3 Evacuation tone	Australia	ISO8201 Temporal 3	12
1,0,1,0,1	22	Sweep	1200 - 500	4.89 / 8.8	2.44 / 6.4	1.62 / 5.6	0.99Hz 1s on, 0.01s off	Evacuate, DIN tone & PFEER	Germany	DIN, PFEER	20
0,1,1,0,1	23	Sweep	2400 - 2850	4.28 / 8.2	3.36 / 7.3	1.56 / 5.5	7Hz	Fast sweep VdS	Germany	VdS	10
1,1,1,0,1	24	Sweep	500 - 1200	4.98 / 8.9	2.73 / 6.7	2.33 / 6.3	(0.5s off, 3.5s on)	Slow whoop evacuate Netherlands	Netherlands	NEN 2575	8
0,0,0,1,1	25	Sweep	800 - 970	4.65 / 8.6	2.13 / 6.1	1.35 / 5.3	50Hz	LF Buzz BS5839 Pt 1	UK	BS5839 Pt 1	8
1,0,0,1,1	26	Sweep	800 - 970	3.48 / 7.4	1.85 / 5.8	1.41 / 5.4	7Hz	Fast sweep LF BS5839 Pt 1	UK	BS5839 Pt 1	8
0,1,0,1,1	27	Sweep	800 - 970	3.40 / 7.3	1.99 / 5.9	1.42/ 5.4	1Hz	Medium sweep LF, BS5839 Pt 1, VdS	UK, Germany	BS5839 Pt 1 VdS	8
1,1,0,1,1	28	Sweep	2400 – 2850	4.26 / 8.2	3.37 / 7.3	1.71 / 5.7	50Hz	High frequency buzz			10
0,0,1,1,1	29	Sweep	500 – 1000	4.20 / 8.1	1.71 / 5.7	1.19 / 5.1	7Hz	Fast whoop			8
1,0,1,1,1	30	Sweep	500 – 1200 – 500	5.02 / 9.0	2.58 / 6.5	1.96 / 5.9	0.166Hz rise 1s, stable 4s, fall 1s	Siren style tone			8
0,1,1,1,1	31	Sweep	800 – 1000	4.61 / 8.6	3.31 / 7.3	1.44 / 5.4	2Hz				8
1,1,1,1,1	32	Sweep	2400 - 2850	4.31 / 8.3	3.54 / 7.4	1.61 / 5.6	1Hz				10

DIMENSIONS

Strobe

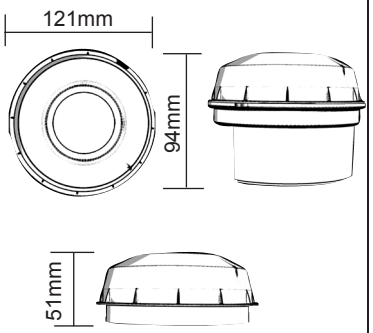

Sounder/SounderStrobe

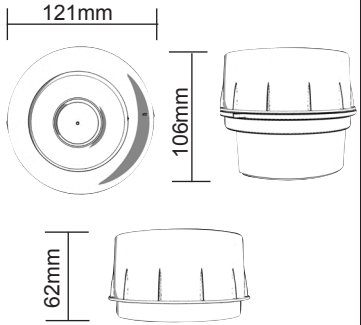

CE 2831 17

Honeywell Products & Solutions Sàrl, Trading as System Sensor, Zone d'Activitiés La Pièce 16, Rolle, CH-1180, Switzerland

DOP007 - WSO-N
DOP008 - WSO-I
DOP009 - WSS-N
DOP010 - WSS-I
DOP031 - WSS-PC-N
DOP032 - WSS-PC-I
DOP033 - WST-PC-I
DOP034 - WST-PC-N

EN 54-3:2001 +A1: 2002 + A2:2006 Fire Detection and Fire Alarm Systems – Sounders
EN 54-17:2005/AC:2007 Fire Detection and Fire Alarm Systems - Short Circuit Isolator
EN 54-23:2010 Fire Detection and Fire Alarm Systems – Visual Alarm Devices

WSO,WSS,WST

IMPORTANT NOTES:

For Isolated variants add 0.19mA to high,medium, low values above.

We reserve the right to amend the content of this document without prior notice.

Sounder Output data, in accordance with EN54-3, is available on Document Ref: D 1022.

ADDRESS SETTING

To set one of the 159 available addresses for the device use the two rotary switches located either side of the dip switch unit. The 'tens' digits go from 0 to 15 and the 'units' from 0 to 9.

Example A (Address setting 108)

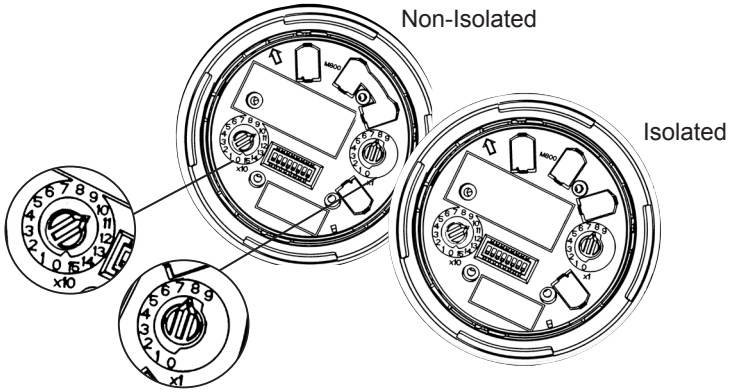

Example B (Address setting 98)